INSTALLATION AND SAFETY INSTRUCTIONS

FOR YOUR SAFETY

WARNING: BE SURE THE ELECTRICITY TO THE WIRES YOU ARE WORKING ON IS SHUT OFF. EITHER THE FUSE REMOVED OR THE CIRCUIT BREAKER OFF .

GENERAL

You don't need special tools to install this fixture. Be sure to follow the steps in the order given. Under no circumstances should a fixture be hung on house electrical wires, nor should a swag type fixture be installed on a ceiling which contains a radiant type heating system. Read instructions carefully. **If you are unclear as to how to proceed, consult a qualified electrician.**

ASSEMBLY

Carefully remove the fixture from the carton and check that all parts are included, as shown in Figure 1 & 2. Be careful not to misplace any of the screws or parts which are needed to install this fixture.

STEP 1:

Attach loop (H) to top of fixture (if applicable).

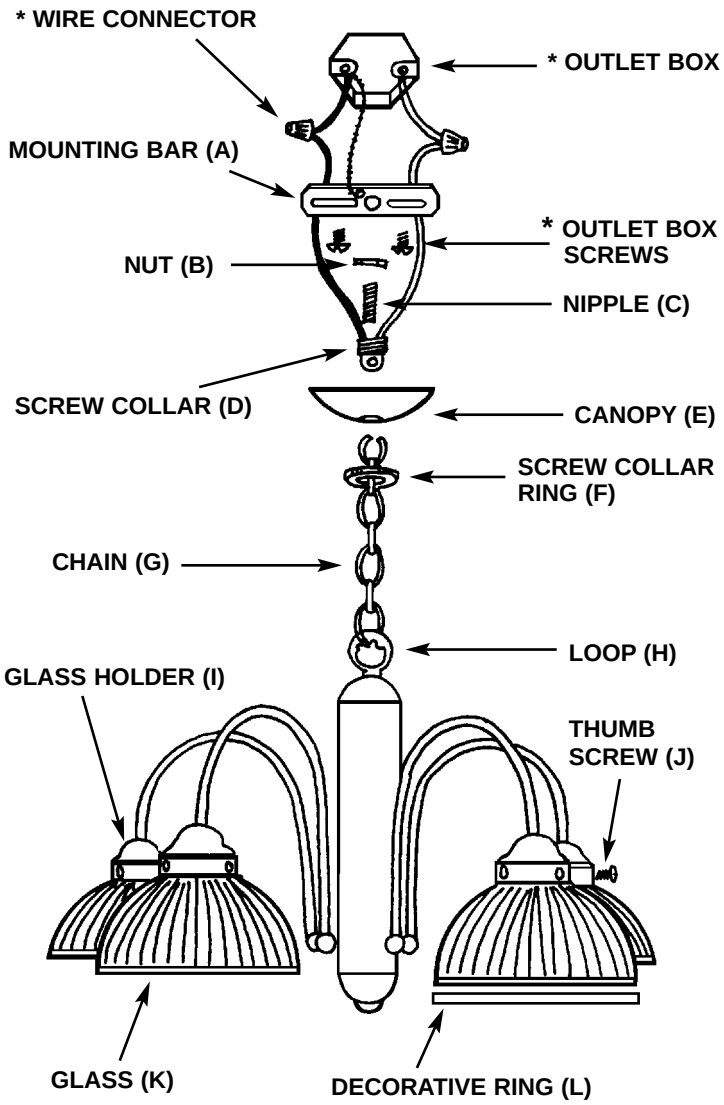

* NOT SUPPLIED

FIGURE 1

GROUNDING AND MOUNTING BAR LOCK UP

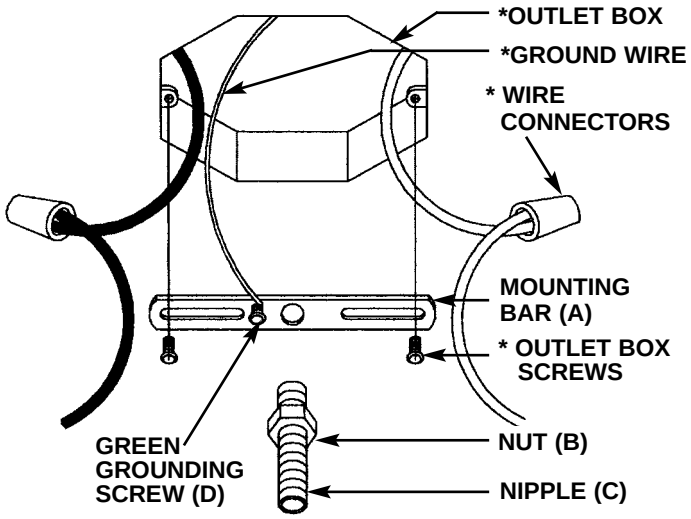

FIGURE 2

*NOT INCLUDED

sea gull lighting®

Installation And Safety Instruction

HC-164

092800

Fill In Item Number On Carton And
File This Sheet For Fixture Reference. ITEM#_____

INSTALLATION HC-164

IMPORTANT: DO NOT ATTACH FIXTURE DIRECTLY TO OUTLET BOX.

STEP 1:

Secure mounting bar (A) to outlet box with outlet box screws (not supplied). Thread nut (B) on nipple (C) so that 3 threads are exposed above nut (B). Thread nipple (C) into mounting bar (A) and secure with nut (B). Attach screw collar (D) to nipple (C).

STEP 2:

Using 2 pairs of pliers, open one link of chain (G) and connect it to the fixture loop (H) at the top of the fixture.

STEP 3:

Slide the screw collar ring (F) and canopy (E), in that order, over chain (G). Open one link on the other end of the chain (G) and attach it to the screw collar (D) which has been mounted to the ceiling nipple (C).
BE SURE TO CLOSE ALL CHAIN LINKS COMPLETELY.

STEP 4:

Lace wires up through chain (G) and pass wires through holes in screw collar (D). We recommend lacing wire up through every other link of chain (G).

STEP 5:

A. Take note of the color of the wire(s) on your fixture. Identify which group your fixture wire(s) falls into and connect the wires according to the directions below:

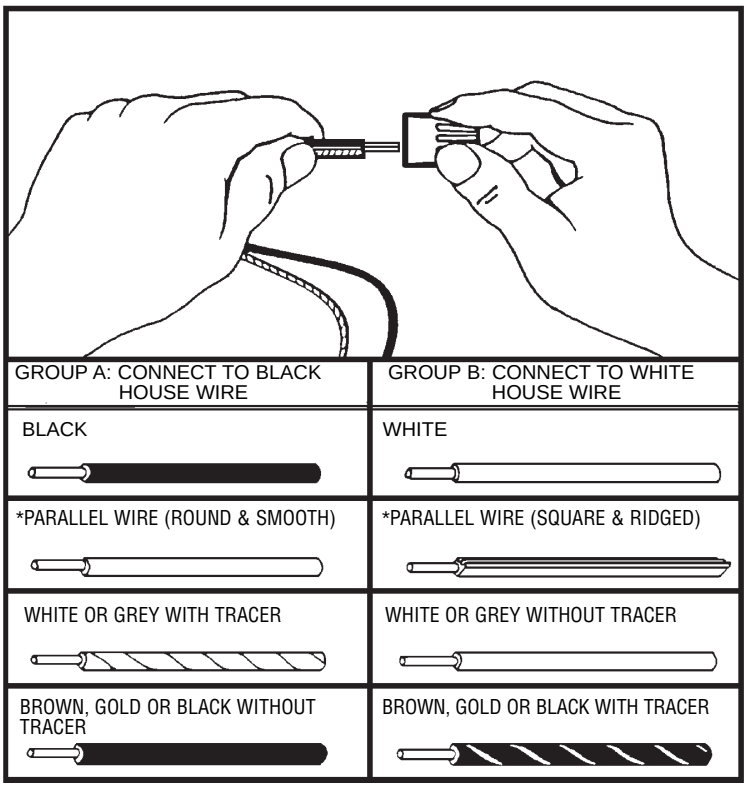

*Note: When parallel wire is used, the tracer wire is square shaped or ridged and less tracer wire is round in shape or smooth. (Seen best when viewed from wire end.) To separate wires, grasp the ends of each wire and pull apart.

B. Take your fixture wire(s) from group A and place evenly against the black wire from the outlet box. **DO NOT** twist wires together before using wire connectors.

C. Fit a wire connector (not supplied) over the wires and screw the connector clockwise until you feel a firmness.
D. Try gently to pull the connector off the wires. If you can pull the connector off, carefully re-do steps B and C, as above and check again for a firm connection.
E. Connect the fixture wire from group B to the white wire from the outlet box in the same manner.

STEP 6:

GROUNDING INSTRUCTIONS: The green grounding screw (D) is to be inserted into the hole with two raised dimples provided on the mounting bar (A). Wrap the ground wire from the fixture (if supplied) and the ground wire from the outlet box (bare metal or green insulated wire) around the green grounding screw (D) on the mounting bar (A) if uninsulated wire is on the mounting bar (A), connect the ground wire from the fixture (if supplied) and the outlet box to it using a small wire connector (not supplied).
NOTE: Underwriters Laboratories does not require all fixtures to have ground wires. These fixtures still meet all UL specifications.
NEVER CONNECT GROUND WIRE TO BLACK OR WHITE POWER SUPPLY WIRES.

FINAL ASSEMBLY

Make sure no bare wires can be seen outside wire connectors.

STEP 1:

After wires are connected, tuck them carefully inside outlet box. Raise canopy (E) against ceiling and screw the screw collar ring (F) to the screw collar (D).

STEP 2:

Place decorative ring (L) (if applicable) on glass (K).

STEP 3:

Place glass (K) into glass holders (I) and secure in place with thumb screws (J). We recommend finger tight.

STEP4:

Install lamps.

CLEANING

To clean, wipe fixture with a soft cloth. Clean glass with a mild soap. Do not use abrasive materials such as scouring pads or powders, steel wool or abrasive paper.

ORDERING PARTS

Keep this sheet for future reference, and in case you need to order replacement parts. All parts for this fixture can be ordered from place of purchase. Be sure to use exact wording from illustration when ordering parts.